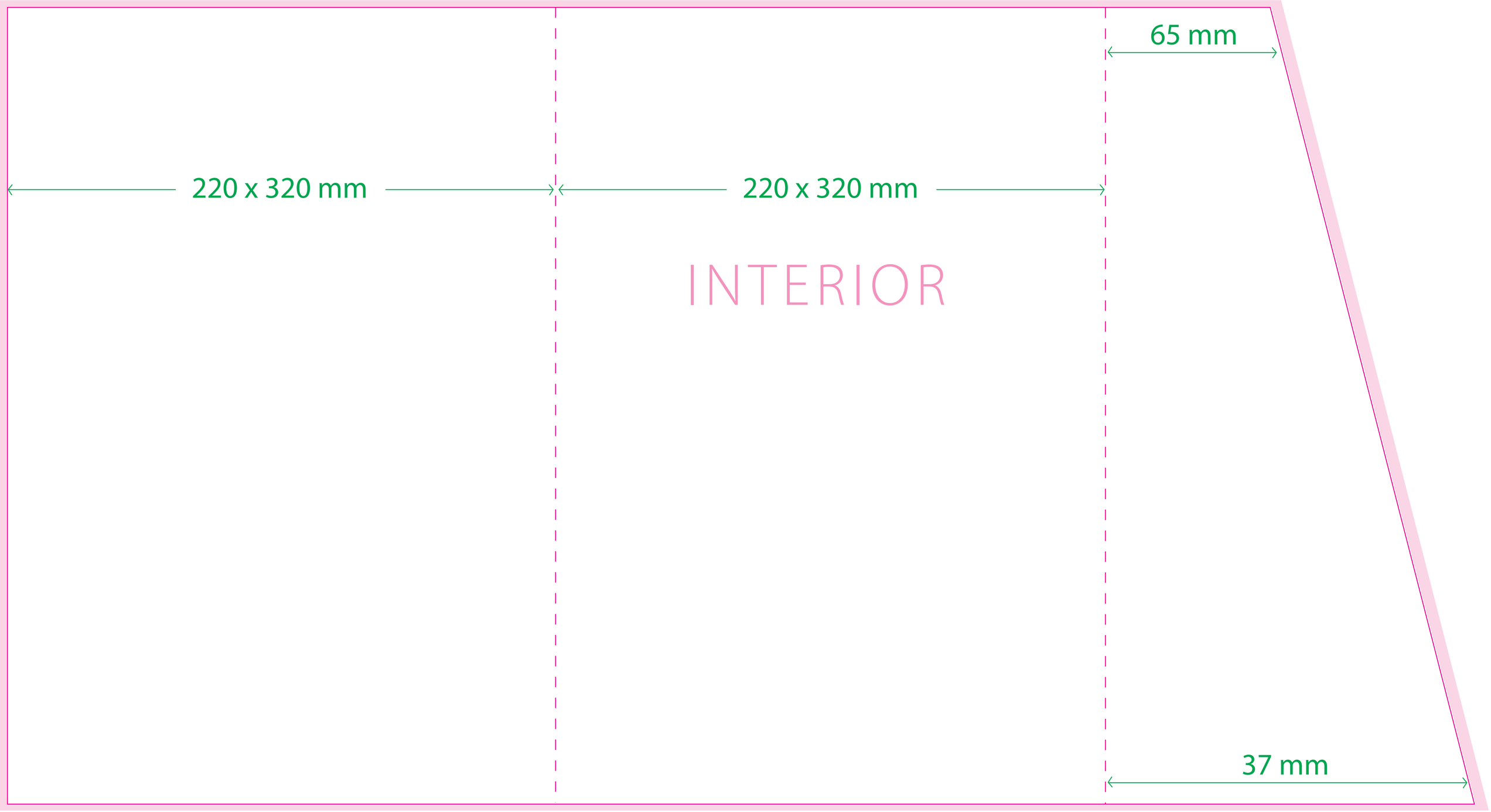
65 mm
220 x 320 mm
220 x 320 mm
INTERIOR
37 mm

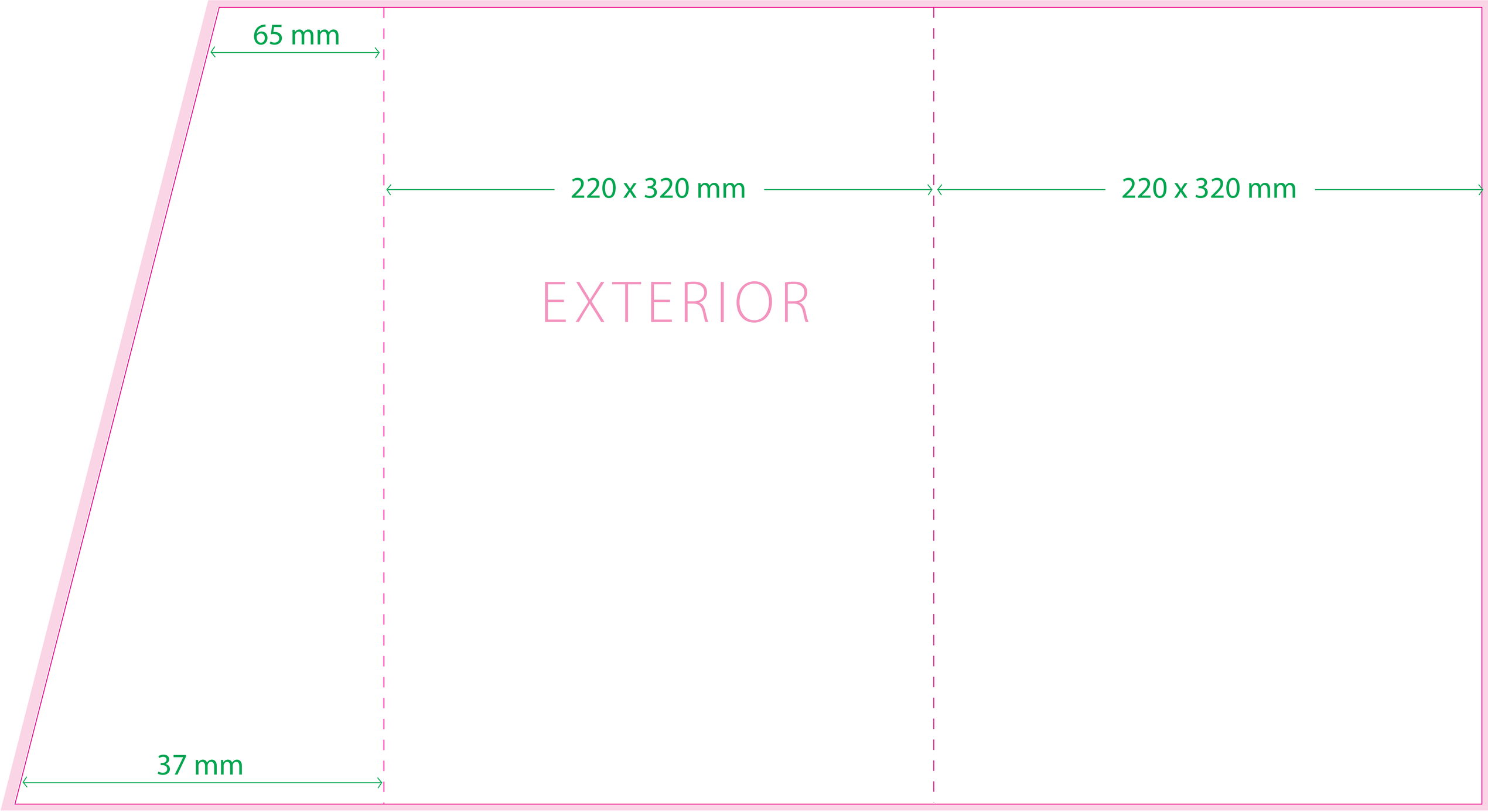
65 mm
220 x 320 mm
220 x 320 mm
EXTERIOR
37 mm